Raritan

PH and PHE ***before*** *June 1979*

(Sowester name "Headland")

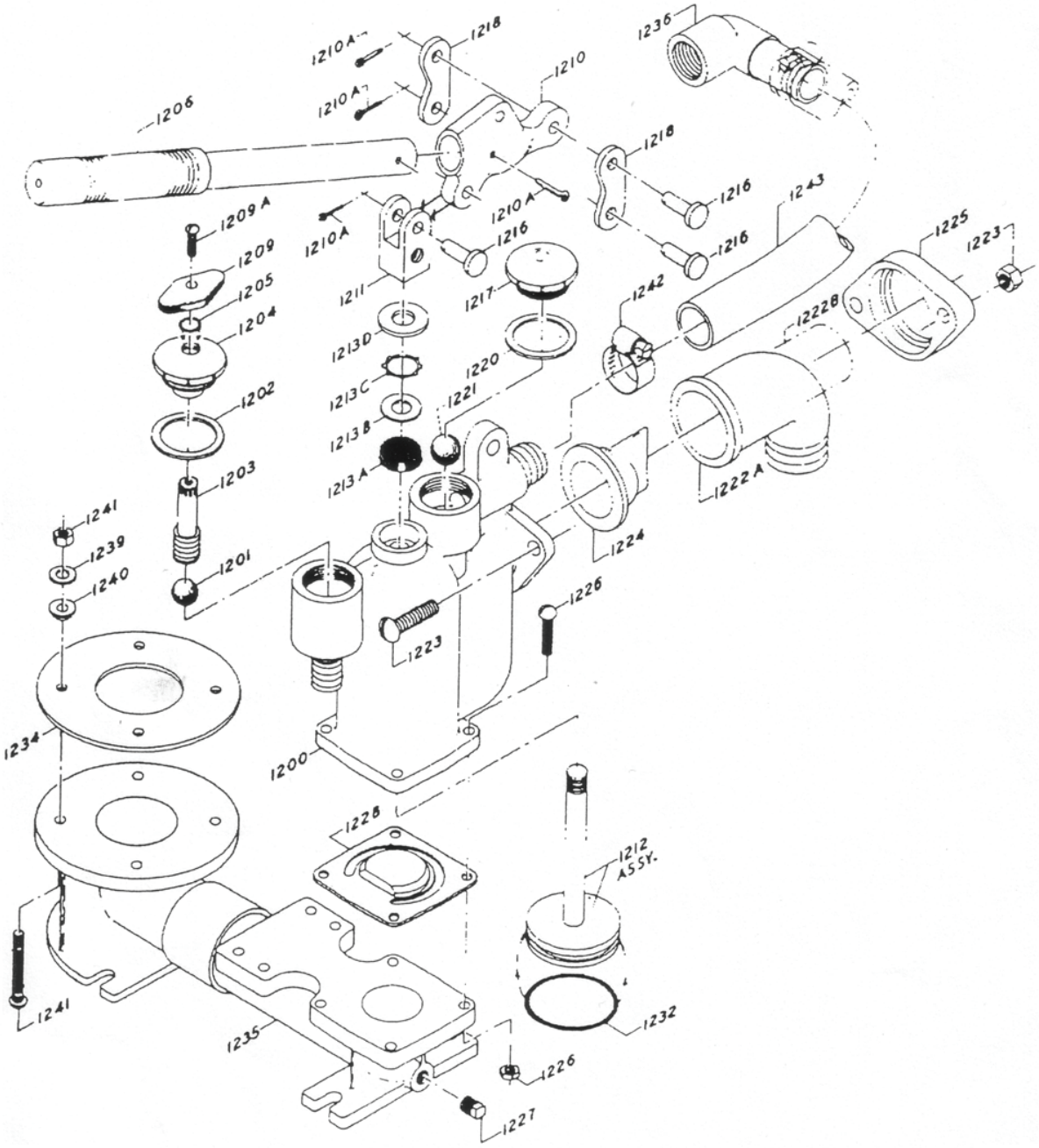

Lee Sanitation Ltd.
Wharf Road, Fenny Compton
Warwickshire CV47 2FE England
Telephone: Int. +44 (0)1295) 770000
Facsimile: Int. +44 (0)1295) 770022